CRUMPET: CREATION OF USER-FRIENDLY MOBILE SERVICES PERSONALISED FOR TOURISM

Stefan Poslad[1], Heimo Laamanen[2], Rainer Malaka[3], Achim Nick[4], Phil Buckle[5] and Alexander Zipf[3]
[1]Queen Mary, University of London, UK,
[2]Sonera Ltd, Finland,
[3]European Media Laboratory GmbH, Germany,
[4]GMD, Forschungszentrum Informationstechnik GmbH Germany,
[5]Emorphia Ltd, UK

ABSTRACT

More and more people combine several purposes with travelling, such as business, leisure, entertainment, and education. Such people may not have time to pre-plan a travel schedule in detail. They need location-aware information about the destination domain and expect individualised information and services. The EU funded research project CRUMPET addresses these factors and will provide new information delivery services for a far more heterogeneous tourist population. The services proposed by CRUMPET take advantage of integrating four key emerging technology domains and applying them to the tourism domain: location-aware services, personalised user interaction, seamlessly accessible multi-media mobile communication, and smart component-based middleware or 'smartware' that uses Multi-Agent Technology.

INTRODUCTION

Tourism is changing: there are more and more people who take short breaks several times a year. More and more people combine several purposes with travelling, such as business, leisure, entertainment, and education. The result is what can be called "edutainment" and "busitainment". People travelling for business, for education, for adventure do not perceive themselves as classical "tourists". These "advanced tourists" have additional interests and needs compared to classical tourists, and are likely to spend more - so offering a revenue stream to support the introduction of new services. Such people are likely to travel light and may not invest a great deal of time to pre-plan a travel schedule in detail. They may not know in advance, if at all, how they may be able to mix business with tourism. Advanced tourists need pragmatic and logistic information; they also expect location-aware information about the destination domain, including history, culture, folk, art, economics, environment and nature. Advanced tourists also expect individualised information and services taking into account their own (levels of) interest and their history of activities and history of information.

The EU funded research project CRUMPET addresses these factors and aims to build new information delivery and service integration systems for a far more heterogeneous tourist population than any system in the past. Information and services accessible from any location using different devices and different connectivity allow the user to prepare a journey and plan activities during that journey, or at the destination.

The services proposed by CRUMPET take advantage of integrating four key emerging technology domains and applying to the tourism domain: personalised services, smart component-based middleware or "smartware" that uses multi-agent technology, location-aware services and transparent mobile data communication. The following sections discuss these issues in more detail.

PERSONALISATION AND ADAPTIVITY

A major issue in offering mobile services to nomadic users is the limited display and networking capacity of mobile devices such as WAP phones or PDAs. A possible solution for this is the adaptation of services and contents to the users' personal interests and their current location. The adaptation of services and contents to personal interests mainly filters the available information. The filtering process is based on a user profile describing the interests, abilities and characteristics of this user.

One major problem in user modelling is the acquisition of knowledge about the user. How can the system determine what the interests of a certain user are? It can either ask the user explicitly for such interests (explicit feedback) or it can observe the user's system usage (implicit feedback) and infer certain interests. The latter method is inexact but does not disturb or annoy the user. Explicitly asking the user would be more precise but it disrupts the user's current task and may be time-consuming and annoying. Moreover, many users are unwilling to fill in forms about preferences and here again the small displays for mobile devices are a restriction. Therefore, user model acquisition should mainly rely on implicit feedback.

Schwab and Pohl (1) describe an acquisition method that works with positive examples, noting when a user has shown interest in a certain piece of information. This method is based on a statistical significance analysis. If a user has requested significantly more than the average amount of a certain kind of information, he is probably interested in this kind of information. The strength of this approach is that it provides knowledge about a user with a defined confidence value (e.g. 99%). The weakness of this adaptivity approach is that it needs a certain amount of events where the user has already shown interest in a certain kind of information before the system can assume significant (confident) user interests. This drawback can be compensated for

by assuming an initial user interest profile from a stereotype, i.e. asking the user only a few questions (demographic and other indicators) which allow classifying him or her. The typical interest profiles for such stereotypes have to be identified in empirical studies. The subsequent user interaction with the system would modify and correct this initial profile.

Another equally important approach to personalise tourism services is based on automatic user localisation. This automatic localisation is used twice within CRUMPET: Firstly, the current position of a user can be used to specify the user's request and further filter the relevant information. Unless the relevant location is specified explicitly, the user gets information relevant for his or her current spatial context. Secondly, if a user is moving in a region, this can be used as a clue to the user's interests. If, for instance, a user visits a number of old churches, then he is probably interested in churches and perhaps also other historic buildings in this town, like an old city hall. Users generate a lot of events when walking around. This can be exploited for the user modelling and to detect and anticipate relevant user interests.

SOFTWARE AGENTS

To support information and service adaptation for nomadic users we require dynamic and open service synthesis, adaptation, aggregation and customization. One of the most promising developments to underpin such an open service model is the advent of software agents. Key features of such software agents are that they offer autonomous service computations, rich communication mechanisms and they can be pro-active and reactive.

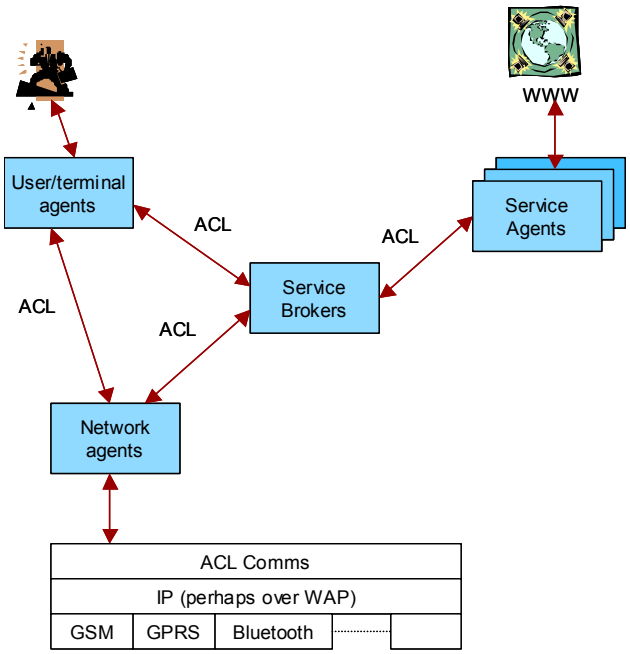

Figure 1: a high-level architecture for the implementation of smart tourism services.

One of the most notable agent standard bodies is FIPA, the Foundation for Intelligent Physical Agents, FIPA (3). Several EU 4th Framework projects have used and proved the interoperability specified in the FIPA standards first published in 1997, one of their outputs being an open source Multi-Agent System (MAS) implementation known as FIPA-OS, Poslad et al (4).

A Multi-agent system (MAS) is a collection of agents with specific roles within an organisational structure. Multi-agent systems provide a combination of local reactivity and global planning. Each agent may be specialised at solving a particular aspect of the domain problem (e.g. service component location) while a complex task (e.g. providing restaurant information in a form appropriate for a given terminal) can be achieved through communication and co-operation amongst agents. Agents can provide accurate monitoring and quicker and more efficient local decision-making regarding the use of resources. By using agents, services and the service infrastructure can dynamically adapt to environmental aspects such as changes in the available network quality of service, and therefore improve performance and usability of services over time.

A schematic diagram of the CRUMPET MAS is given in Figure 1. The User / Terminal agents are hosted on the end user terminal devices and provide the user with the service GUI. These devices will also provide a light-weight agent infrastructure called micro-FIPA-OS to execute agents. The user agent manages the user preferences to influence the services brokered.

The Network Agents manage (monitor and control) the communications layer. Multiple Network Agents will support a level of load balancing. The services provided by the Network Agents will be based upon the recommendations of the FIPA Nomadic Application Support specification, FIPA (5).

The Service Agents will conceptually wrap the existing e-tourism services. Service Agents may also be used to construct agent-enabled tourism services developed specifically within the CRUMPET project. There will be at least one Service Agent per tourism service.

The Service Broker agents will extend the Directory Facilitator of the FIPA Agent Management Specification, FIPA (6), to include the brokerage functionality included as part of the FIPA 2000 specifications. The brokerage function will enable User Agents to publish interest in particular services and receive information about services that meet criteria such as proximity constraints. For example, when the user's location changes, local services may then meet the specified service constraints and be offered to the user.

The agent behaviour is based on the usage and user model. The User/Terminal agents adapt the information presentation to the platform evaluating the usage profile of the user. The Network Agents adapt the communication and information presentation evaluating the currently available connectivity and user presentation needs. The Service Brokers adapt the information and service selection and presentation evaluating

the user model for the individual knowledge, interests and preferences.
The basic idea is to make it possible to use distributed geodata servers and corresponding web map servers for spatial information within the CRUMPET platform.

LOCATION-BASED SERVICES (LBS)

Many applications of Geographical Information Systems (GIS) for tourism have been developed in order to allow access to regional information through the Internet. For instance, the Deep Map WebGIS developed at EML, integrates services and information for the city of Heidelberg, Malaka and Zipf (2). More recently, research projects have started to focus more on the standardised, flexible dissemination of (generally high volume) geographic data on wireless networks for nomadic applications. In this context, two new specifications released by the OpenGIS Consortium (OGC) are of great importance: the Web Mapping Interface Specification and the Geographic Mark-up Language (GML) based on the older Simple Feature Specification. GML is an XML-version of the OpenGIS Simple Feature specification (SFS), a specification for vector-based map content (geographic features) for GIS.

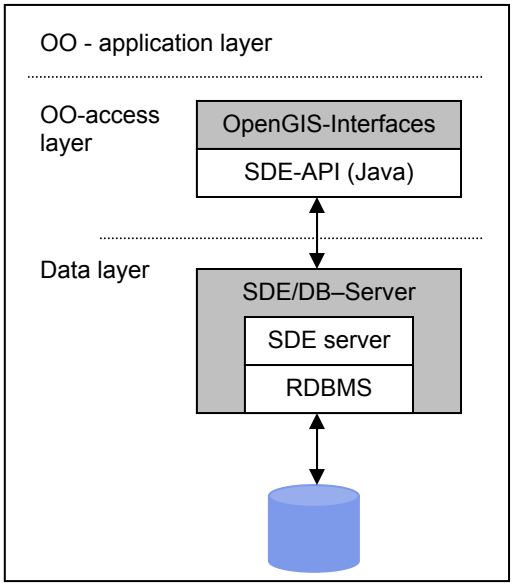

Figure 2: System interaction between access- and data layer of the Spatial Agent

This geographical information is a crucial feature for tourism applications as every user will want his or her individualised information on site with latest details on topics such as traffic, weather, sights, availability of services in town, navigation aid, and historical and economic background.
Developing location based services for tourism in projects like CRUMPET necessitates management of large volumes of geographical data in order to allow for a broad range of functions on geo-objects for multiple clients. So-called geo-data servers handle geographical data. They are extensions to databases providing additional spatial query and indexing capabilities. In order to improve the interoperability between several GIS products, the OGC published the OpenGIS SFS defining interfaces for handling geographical data and services. Features are intended to describe the geography of entities in the real world. Simple Features are features whose geometric properties are restricted to 'simple geometries' (e.g., coordinates are defined in two dimensions and the path of a curve between coordinates is assumed to be interpolated linearly). Real world entities such as “Roads” are typically represented as features comprising a set of spatial and non-spatial attribute values (e.g., a geometry such as a line string representing the road’s spatial extent, a string representing its name, etc.). Features may have an associated set of operations or behaviour. There are implementation specifications available based on SQL, COM and CORBA.

The Geographic Markup Language (GML)

GML is an XML representation of Simple Features. In order to draw a map it is necessary to transform GML into a graphic format, either by direct rendering, or by transformation into (XML-encoded) graphical elements. This can be done anywhere in the processing chain between the data store and the visualization device. GML can be related to other new XML-based standards like the “Point Of Interest eXchange Language” (POIX) defined by the W3C Consortium. This is a more simplified model for position and direction information. POIX data can be generated from GML.
An OpenGIS-Server or implementation provides the software that exposes these constructs to outside clients through specified interfaces. A so-called “Spatial Agent”, Figure 2, is being implemented making the OpenGIS server functionality available to other FIPA agents. The Spatial Agent performs a wide range of spatial functions from spatial queries and selections, distance measures, export of geometry data to visibility analysis. The agent consists of a three-tier-application using a database with the SDS (Spatial Database Engine) middleware as storage for geographical data and an object-oriented access tier using the SFS for CORBA.

WIRELESS COMMUNICATION FOR NOMADIC TOURIST SERVICES

The environment of nomadic tourist services—wireless data communications and mobile devices—creates many new challenges that have not been adequately addressed in today's Internet-based tourist services. Wireless wide-area networks are in a phase of rapid development. High Speed Circuit Switched Data (HSCSD) and General Packet Radio Service (GPRS) are already in the market and the Universal Mobile Telecommunications System (UMTS) is expected to be launched in 2002-4. A direct consequence of these developments is that performance will be significantly increased. For example, the throughput in some envi-

ronments may be close to two Mbits/s. However, the basic challenges of wireless wide-area communications remain. Firstly, in the environment of wireless data communications the Quality of service or QoS (such as line rate, delay, throughput, round-trip time, and error rate) may change dramatically when a tourist moves from one location to another. For example, when the tourist roams from a UMTS cell to a GPRS cell, the throughput may drop from 1 Mbits/s down to 24 Kbits/s. In addition, it is foreseen that seamless roaming between different network technologies (e.g. between UMTS and WLAN) will be needed in the near future, leading to an increase in the variability mentioned above. Secondly, the variety of mobile devices (such as portable PCs, handheld devices and smart phones) that tourists will use to access tourist services is increasing rapidly. For example, smart phones just cannot display high quality images, designed to be displayed on the screens of high-end laptop PCs. Therefore; it is not wise to transfer such images over a low throughput wireless link, especially when tourists must pay for transmitted data, which is mostly unusable. This high variety, high volatility environment of Internet-based tourist services creates a need for adaptability. Tourists will demand services that will automatically and transparently adjust to the changes mentioned above.

CRUMPET DATA COMMUNICATIONS FRAMEWORK

One of the objectives of CRUMPET project is to provide seamlessly accessible nomadic tourist services, that is, to provide the best obtainable quality of service where and when ever they want to use those services. The CRUMPET project addresses the challenges mentioned above by enhancing and implementing FIPA Nomadic Application Support specifications, FIPA (5). The Crumpet nomadic application framework (Figure 3) comprises the following functions: monitoring the QoS of data transmission (Monitor Agent); controlling data transmission and data transmission equipment (Control Agent); selecting appropriate data transmission protocols, and selecting the appropriate representation of the agent communication language. In addition, the following components are specified: agent interaction protocols to negotiate data transmission protocols and message representations to be used; data communications ontology, and the CRUMPET gateway. The CRUMPET gateway will provide services such as transformation of message transport protocols and message data representations. In addition, the gateway may support modifications of application data representation, such as lossy compression of video clips, images, and sound.

The Monitor Agent supports two ways to get QoS information. Firstly, an agent may issue a single query for QoS values and secondly, the agent may subscribe to a notification when something important happens to the QoS parameters. The Monitor Agent can dispatch a notification to the requesting agent at a predefined interval, or when there are some changes to the QoS. The former mechanism (periodic notification) can be used if the agent wants to be informed about the QoS values on a regular basis, for example the value of the throughput every five seconds. The latter mechanism (on occurrence notification) is useful when the agent does not care about QoS values until something relevant to its task happens. For example, an agent that is sending real-time data needs to be informed when throughput drops below a given threshold.

The Control Agent is responsible for controlling message transport connections. The Control Agent may activate the establishment, disconnection, suspension, and activation of the connection between mobile computers and the CRUMPET gateway. The Control Agent supports two management functions to control message transport connections: open communication channel and close communication channel. In addition to communication channel functions, the Control Agent supports corresponding functions for the message transport protocols.

Bit-Efficient Representation of FIPA ACL

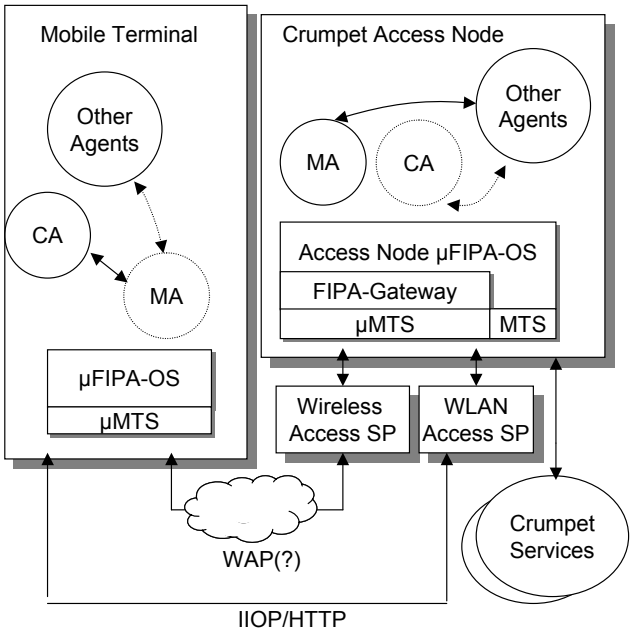

Figure 3: CRUMPET Data Communications Framework

Tourist applications and agents communicating over wireless links need to minimise the volume of transmitted data as the data volume translates directly to the response time. Thus, all data should be converted to the most bit-efficient format. For example, the string-based representations of FIPA ACL messages are not practicable in these environments.

Therefore, CRUMPET services use the *fipa-bitefficient-std* representation, FIPA (7), to reduce the volume of ACL communication between communicating peers. In the bit-efficient ACL, there are two pri-

mary ways to reduce the transfer volume over the wireless link: data reduction/compression and intelligent caching. The ACL message is encoded using a tokenised syntax. In addition, the bit-efficient ACL includes an intelligent caching, meaning that similar parts of subsequent messages are not transmitted multiple times over the wireless link, as subsequent occurrences are replaced by short codes.

NOMADIC APPLICATION ONTOLOGY

The CRUMPET project implements the FIPA nomadic application ontology. The purpose of the ontology is to provide agents and agent platforms with a commonly agreed set of terms such as Quality of Service, related to the communication channels and message transports and to define relationships between terms. These agreed terms enable agents to negotiate a suitable communication channel or protocol for a given situation.

SUMMARY AND CONCLUSIONS

The overall aim of CRUMPET is to implement, validate, and trial tourism-related value-added services for nomadic users (across mobile and fixed networks). In particular the use of agent technology will be evaluated (in terms of user-acceptability, performance and best-practice) as a suitable approach for fast creation of robust, scalable, seamlessly accessible nomadic services. The implementation will be based on a standards-compliant open source agent framework, extended to support nomadic applications, devices, and networks. Services will be personalised and location aware.

ACKNOWLEDGEMENTS

This work has been undertaken in the context of, and supported by, the EU funded project CRUMPET (IST-1999-20147). The authors wish to thank Heiki Helin, Mikko Laukkanen and Barbara Schmidt-Belz for their valuable comments for improving this article.

REFERENCES

1. Schwab I and Pohl W, 1999, “Learning information interest from positive examples”, Proc. Workshop "Machine Learning for User Modelling" held at 7th Int. Conf. on User Modelling, UM99, Banff, Canada
2. Malaka R. and Zipf A, 2000, “DEEP MAP - Challenging IT research in the framework of a tourist information system”. In: Fesenmaier, D.Klein, S. and Buhalis, D. (Eds.): Information and Communication Technologies in Tourism 2000. Proceedings of ENTER 2000, Barcelona. Springer Computer Science, Wien, New York, 15-27
3. FIPA Foundation for Intelligent Physical Agents home page. FIPA, http://www.fipa.org
4. Poslad S, Buckle P and Hadingham RG, “The FIPA-OS agent platform: Open Source for Open Standards”, Proceedings of PAAM 2000, Manchester, UK, 355-368
5. FIPA Nomadic Application Support Specification. FIPA 2000. Available at http://www.fipa.org/specs/fipa00014/
6. FIPA Agent Management Specification. Available at http://www.fipa.org/specs/fipa00023/.
7. FIPA ACL Message Representation in Bit-Efficient Specification. FIPA 2000. Available at http://www.fipa.org/specs/fipa00069/.